REPLACEMENT PARTS LIST

Single Zone Ductless Mini-Split with Inverter Technology

A-SVH12SB-0

EXPLODED VIEW

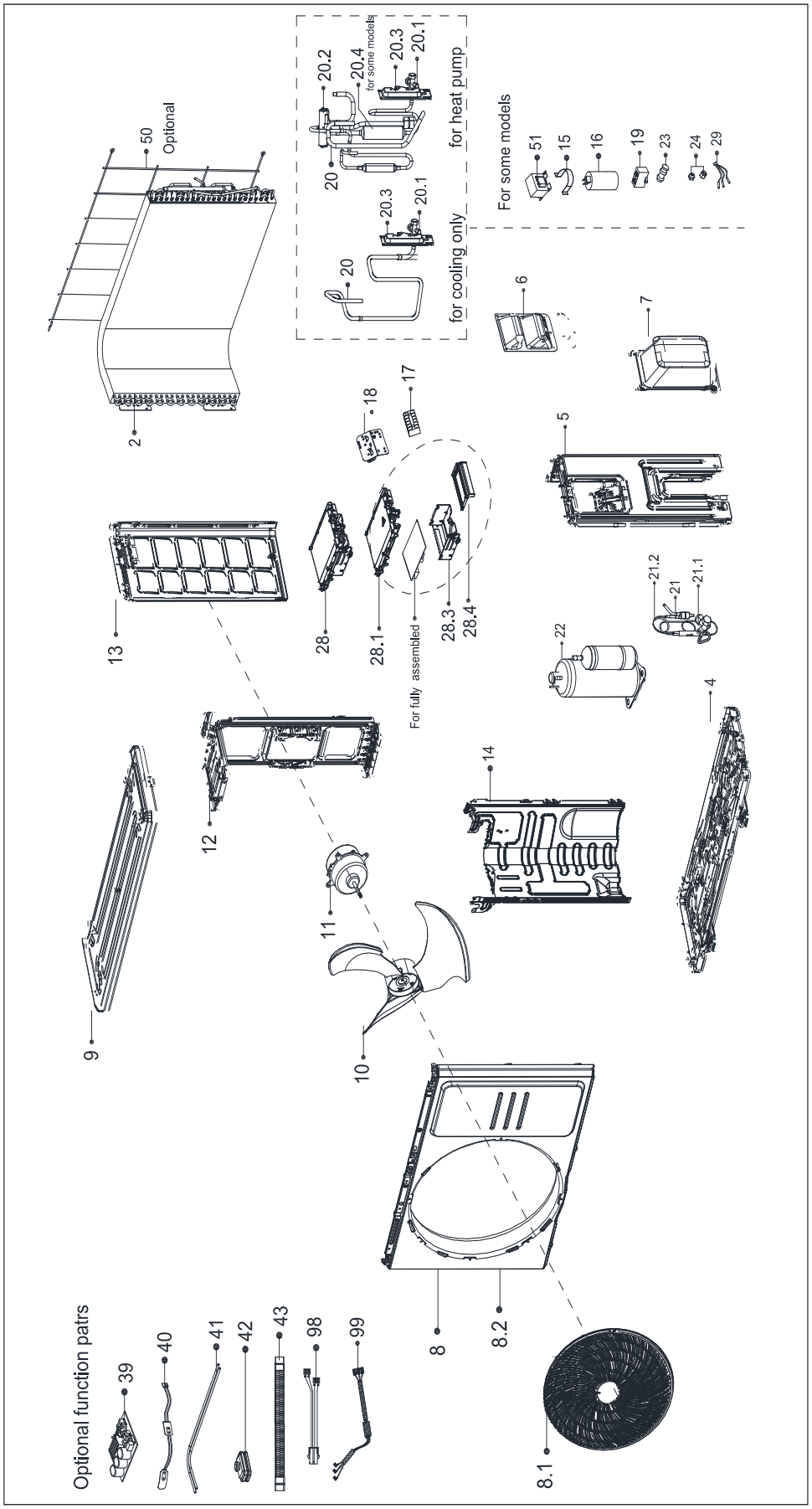

REPLACEMENT PARTS

Location	Part Name	Quantity	Part No.
2	Condenser assembly	1	15822000009658
4	Chassis assembly	1	12222000013427
5	Right clapboard assembly	1	12222000012141
6	Big handle assembly	1	12222000010966
7	Water collector	1	12122000007150
8	Front panel assembly	1	12222000013185
8.1	Air outlet grille	1.0	12222000013187
8.2	Front panel	1.0	12222000013186
9	Top cover assembly	1	12222000012128
10	Axial flow fan	1	12100105000821
11	Brushless DC Motor	1	11002015000396
12	Supporter of fan motor	1	12222000012140
13	Left supporter	1	12222000012135
14	Partition board assembly	1	12222000013428
17	Terminal	1	17400401000075
18	Terminal board	1	12222000002259
20	4-way Valve Assembly	1	15422000018013
20.1	Gas valve	1.0	15500204000021
20.2	4-way valve	1.0	15500216000341
20.3	Valve plate	1.0	12222000002571
20.4	Muffler Subassembly	1.0	15122000025014
21	Liquid valve Assembly	1	15422000016417
21.1	Liquid valve	1.0	15500208000028
21.2	Capillary	1.0	15122000011919
22	DC Inverter rotary compressor	1	11103020005082
24	Copper nut	1	15500406000010
24	Copper nut	1	15500406000016
28	Electronic control box subassembly	1	17222000039268
28.1	Support of electronic control box	1.0	12122000024223
28.3	Electronic installing box subassembly	1.0	12222000012106
28.4	Fixing board	1.0	12122000024222
29	Combination Sensor	1	11201011000067
40	Crankcase electric heater	1	17402001000559
41	Electric heating tube	1	17402002000465
43	Drain pipe	1	12100509000059
50	Rear net	1	12222000012385
99	Compressor wire subassembly	1	17401203012697

Due to ongoing product improvements, specifications and dimensions are subject to change and correction without notice or incurring obligations. Determining the application and suitability for use of any product is the responsibility of the installer. Additionally, the installer is responsible for verifying dimensional data on the actual product prior to beginning any installation preparations.

Incentive and rebate programs have precise requirements as to product performance and certification. All products meet applicable regulations in effect on date of manufacture; however, certifications are not necessarily granted for the life of a product. Therefore, it is the responsibility of the applicant to determine whether a specific model qualifies for these incentive/rebate programs.

1900 Wellworth Ave., Jackson, MI 49203 • Ph. 517-787-2100 • www.marsdelivers.com

06/2020

REPLACEMENT PARTS LIST

Single Zone Ductless Mini-Split with Inverter Technology

B-SVH12SB-0

EXPLODED VIEW

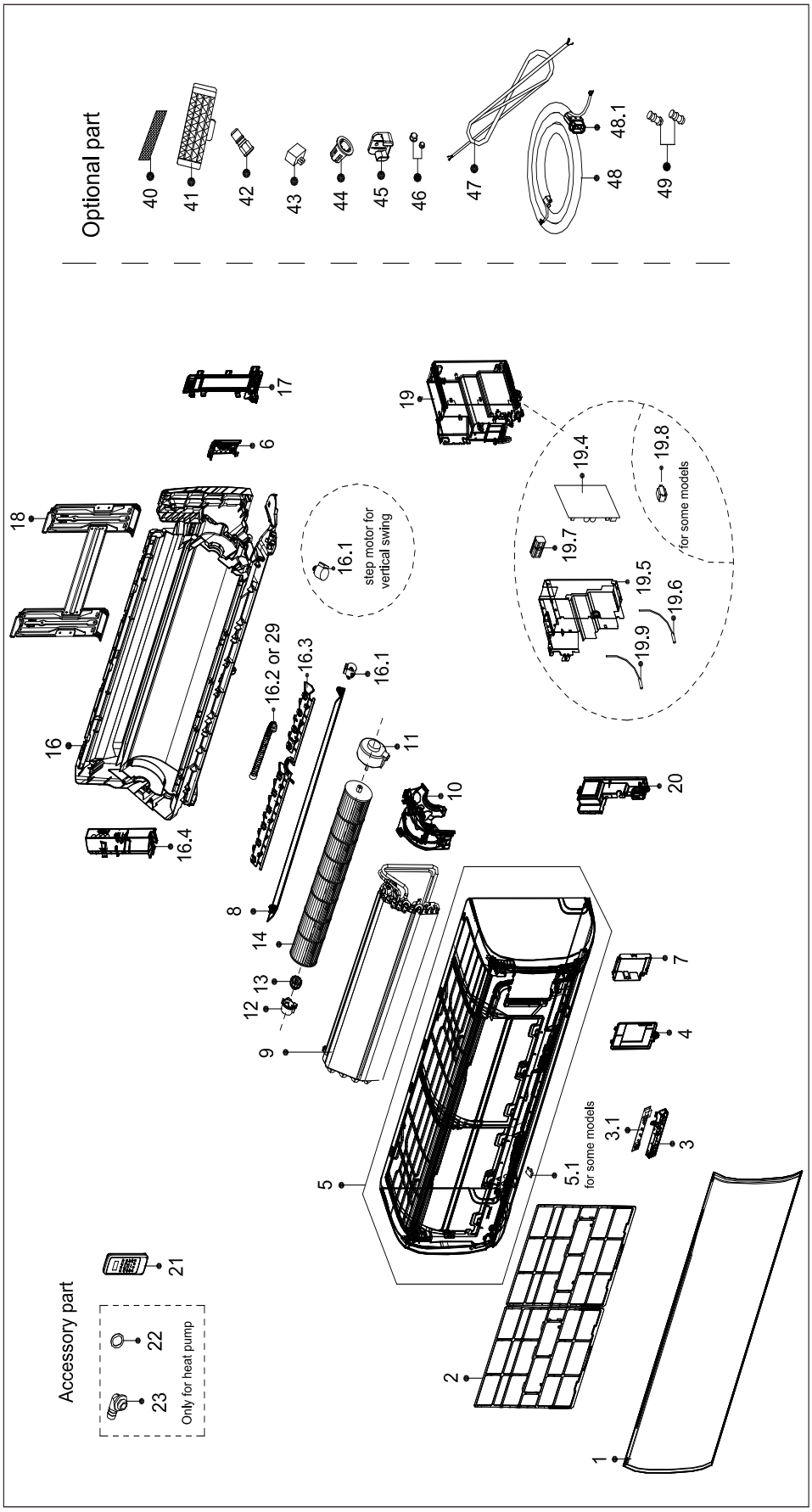

REPLACEMENT PARTS

Location	Part Name	Quantity	Part No.
1	Panel assembly	1	12122000A78025
2	Air filter	2	12122000015224
3	Display box subassembly	1	17222000A45572
3.1	Display board subassembly	1	17122000041914
4	Cover of electrical equipment	1	12122000013131
5	Panel frame assembly	1	12122000013170
5.1	Screw Cap	2	12122000013139
6	Front cover of chassis(right)	1	12122000013140
7	Cover of electrical equipment subassembly	1	12122000013141
8	Horizontal louver assembly	1	12122000013168
9	Evaporator assembly	1	15822000008180
10	Fan motor cover	1	12122000013129
11	Single phase asynchronous motor	1	11002012005527
12	Bearing holder	1	12122000000350
13	Bearing base	1	12622000000006
14	Cross flow fan	1	12100102000044
16	Chassis assembly	1	12122000026982
16.1	Stepper motor	1	11002010000143
16.3	Horizontal louver	1	12122000013167
16.4	Front cover of chassis(left)	1	12122000013123
17	pipe clamp board	1	12122000013136
18	Installation plate	1	12222000A03012
19	Electronic control box subassembly (Mid-and low-end)	1	17222000031620
19.4	Main control board subassembly	1	17122000048811
19.5	Electronic control box subassembly	1	12122000013001
19.6	Pipe Temperature Sensor	1	11201007003447
19.7	Terminal	1	17400401000006
19.9	Room temperature sensor	1	11201007003424
20	Electrical Control Box Cover Subassembly	1	12122000013132
21	Remote controller	1	17317000A51872
22	seal ring	1	12600701000039
23	Drain hose	1	12100509000061
29	Drain hose	1	12100501000032
40	Filter	2	12100207000131
42	Check valve	1	15500209000001
45	Bracket of remote Controller	1	12117000002114
46	Copper nut	1	15500406000010
46	Copper nut	1	15500406000016
52	Chassis assembly	1	12122000026982

Due to ongoing product improvements, specifications and dimensions are subject to change and correction without notice or incurring obligations. Determining the application and suitability for use of any product is the responsibility of the installer. Additionally, the installer is responsible for verifying dimensional data on the actual product prior to beginning any installation preparations.

Incentive and rebate programs have precise requirements as to product performance and certification. All products meet applicable regulations in effect on date of manufacture; however, certifications are not necessarily granted for the life of a product. Therefore, it is the responsibility of the applicant to determine whether a specific model qualifies for these incentive/rebate programs.

1900 Wellworth Ave., Jackson, MI 49203 • Ph. 517-787-2100 • www.marsdelivers.com

06/2020